INSTALLATION, OPERATION AND MAINTENANCE INSTRUCTIONS FOR

MODEL 495 SPLIT CASE FIRE PUMP

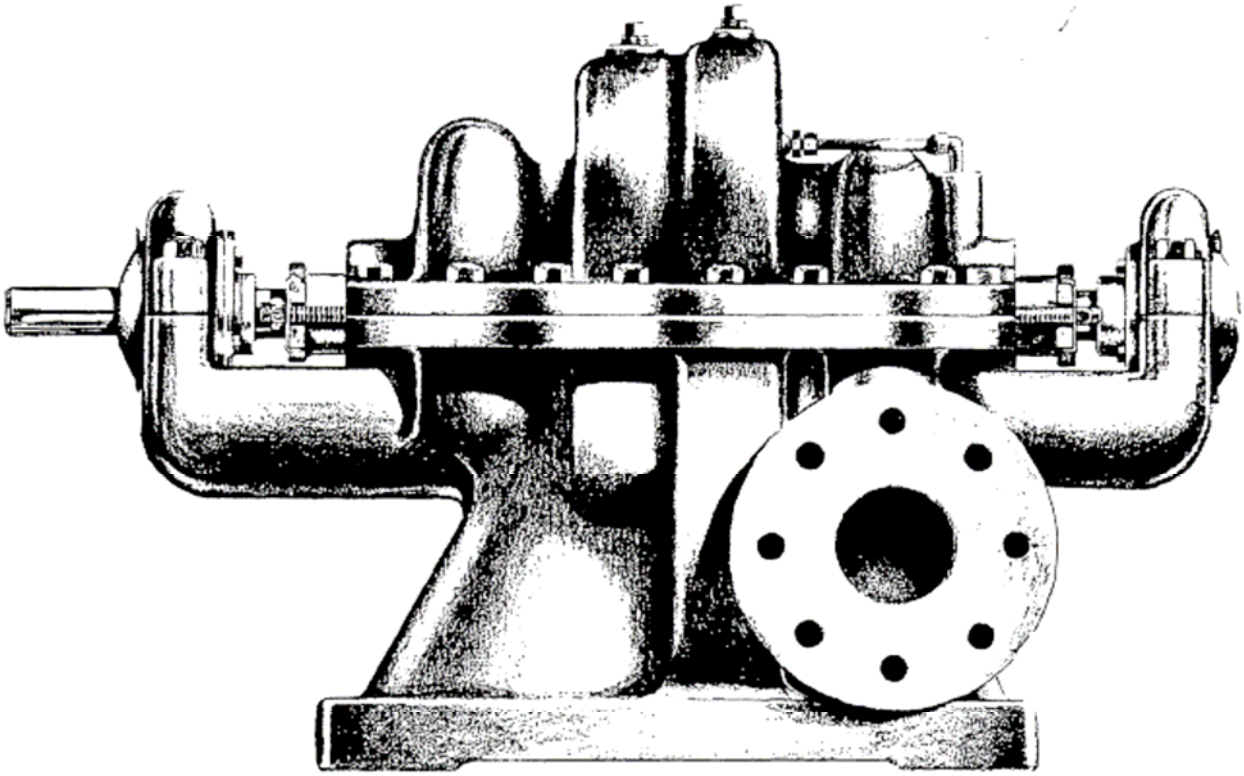

AURORA®
Pentair Water

TABLE OF CONTENTS

TOPIC	PAGE
PUMP IDENTIFICATION	1
CAUTION NOTES	2
STORAGE OF PUMPS	2
INTRODUCTION.	3
INSTALLATION	
1. General	3
2. Net Positive Suction Head (NPSH)	3
3. Minimum Submergence of Suction Pipe and Pit Design	4
4. Location and Handling	4
5. Foundation	4
6. Leveling of Unit	4
7. Grouting	5
8. Piping	5
9. Auxiliary Piping Connections and Gauges	5
10. Final Coupling Alignment	5-6
11. Flexible Shaft Alignment	6
12. Rotation	6
OPERATION	
1. Operating at Reduced Capacity	7
2. Priming	7
3. Starting the Pump	8
4. Bearing Operating Temperature	8
5. Troubleshooting Operating Problems	8
MAINTENANCE	
1. Maintenance History	9
2. Inspections and Preventive Maintenance Requirements	10
3. Bearing Lubrication	10
4. Packing Box	11
5. Packing Replacement	11-12
6. Pump Disassembly	12-13
7. Pump Assembly	14-16
REPAIR PARTS	17
RECOMMENDED SPARE PARTS.	17
NOTES	18-20
CROSS-SECTIONAL DRAWINGS AND PARTS LISTS	21-22

PUMP IDENTIFICATION

Congratulations! You are the owner of one of the finest pumps commercially available. If you give it the proper care as outlined and recommended by this manual, it will provide you with reliable service and long life.

495 SPLIT CASE PUMPS

Your Aurora Model 495 is a Split Case Pump, meaning the casing is split along the horizontal centerline. This new compact design, with its shorter bearing span, has less deflection under hydraulic load which results in less wear on the sleeves, bearings and packing. It is ideally suited for applications such as water systems, boosters, liquid transfer, irrigation and Fire Protection Systems. These pumps are available with a wide variety of options including impeller wear rings. Some options will not be available on Model 495 Fire Pumps.

This manual applies to:

X-495-XX Horizontal Split Case Fire Pumps

Example: 5-495-15

- 15 — Maximum nominal impeller diameter
- 495 — Horizontal Fire Pump
- 5 — Discharge size

Carefully record all the following data from your pump nameplate. It will aid in obtaining the correct replacement parts in the future.

FIGURE (MODEL): _____ SERIAL NUMBER: _____

IMPELLER DIAMETER:_____ SIZE: _____

CAPACITY: _____ GPM _____ TOTAL HEAD _____ FT.

RPM: _____

DRIVER

MANUFACTURER: _____

HORSEPOWER:_____ SERIAL NUMBER: _____

SPEED: _____ RPM _____ VOLTAGE: _____

MANUFACTURER: _____FRAME: _____

THESE INSTRUCTIONS APPLY TO THE PUMP ONLY. THEY ARE INTENDED TO BE GENERAL AND NOT SPECIFIC. IF YOUR OPERATING CONDITIONS EVER CHANGE, ALWAYS REFER TO THE FACTORY FOR REAPPLICATION. ALWAYS REFER TO THE MANUALS PROVIDED BY MANUFACTURERS OF THE OTHER EQUIPMENT FOR THEIR SEPARATE INSTRUCTIONS.

CAUTION
IMPORTANT SAFETY NOTICE

VARIOUS FEDERAL, STATE AND LOCAL LAWS AND THE REGULATIONS CONCERNING OSHA AFFECT THE INSTALLATION, USE AND OPERATION OF THIS TYPE OF EQUIPMENT. COMPLIANCE WITH SUCH LAWS RELATING TO PROPER INSTALLATION AND SAFE OPERATION OF THIS TYPE OF EQUIPMENT IS THE RESPONSIBILITY OF THE EQUIPMENT OWNER AND ALL NECESSARY STEPS SHOULD BE TAKEN BY THE OWNER TO ASSURE COMPLIANCE WITH SUCH LAWS BEFORE OPERATING THE EQUIPMENT.

STORAGE OF PUMPS

IF THE EQUIPMENT IS NOT TO BE IMMEDIATELY INSTALLED AND OPERATED, STORE IT IN A CLEAN, DRY, WELL-VENTILATED PLACE, FREE FROM VIBRATION, MOISTURE AND RAPID OR WIDE VARIATIONS IN TEMPERATURE.

SPECIAL INSTRUCTIONS FOR:

GREASE-LUBRICATED PUMPS: ROTATE THE SHAFT FOR SEVERAL REVOLUTIONS AT LEASE ONCE EVERY TWO WEEKS TO:

1. **COAT THE BEARING WITH LUBRICANT.**
2. **RETARD OXIDATION OR CORROSION AND,**
3. **PREVENT POSSIBLE FALSE BRINELLING.**

CONSIDER A UNIT IN STORAGE WHEN:

1. **IT HAS BEEN DELIVERED TO THE JOBSITE AND IS AWAITING INSTALLATION.**
2. **IT HAS BEEN INSTALLED BUT OPERATION IS DELAYED PENDING COMPLETION OF CONSTRUCTION.**
3. **THERE ARE LONG PERIODS (30 DAYS OR MORE) BETWEEN OPERATION CYCLES.**
4. **THE PLANT (OR DEPARTMENT) IS SHUT DOWN FOR PERIODS OF LONGER THAN 30 DAYS.**

NOTE: STORAGE REQUIREMENTS VARY DEPENDING ON THE LENGTH OF STORAGE, THE CLIMATIC ENVIRONMENT AND THE EQUIPMENT. FOR STORAGE PERIODS OF THREE MONTHS OR LONGER, CONTACT THE MANUFACTURER FOR SPECIFIC INSTRUCTIONS. IMPROPER STORAGE COULD DAMAGE THE EQUIPMENT WHICH WOULD RESULT IN NON-WARRANTY COVERED RESTORATION REQUIREMENTS OR NON-WARRANTY COVERED PRODUCT FAILURES.

INTRODUCTION

This manual contains information that is the result of carefully conducted engineering and research efforts. It is designed to supply adequate instructions for the safe and efficient installation, operation maintenance of your pump. Failure or neglect to properly install, operate or maintain your pump may result in personal injury, property damage or unnecessary damage to the pump.

Variations exist in both the equipment used with these pumps and the particular installation of the pump and driver. Therefore, specific operating instructions are not within the scope of this manual. The manual contains general rules for installation, operation and maintenance of the pump.

Observe all caution or danger tags attached to the pump or included in this manual.

INSTALLATION

1. GENERAL

CAUTION: CAREFULLY READ ALL SECTIONS OF THIS MANUAL AND ALL OTHER INSTRUCTION MANUALS PROVIDED BY MANUFACTURERS OF OTHER EQUIPMENT SUPPLIED WITH THIS PUMP.

Upon receipt of the shipment, unpack and inspect the pump and driver assemblies and individual parts to ensure that none are missing or damaged. Carefully inspect all boxes and packing material for loose parts before discarding them. Report immediately to the transportation company involved, and to the factory, any missing parts or damage incurred during shipment, and file your “damaged and/or lost-in-shipment” claim with the carrier.

Horizontal pump and driver assemblies mounted on a common base are accurately aligned at the factory. However, alignment may be disturbed in transit or during installation. It must be checked after the unit is leveled on its foundation, after the grouting has set and the foundation bolts are tightened, and after the piping is completed.

When the pump and driver are mounted on separate base structures, the pump should be leveled and aligned first, then the driver leveled and aligned with the pump. With separate bases, a flexible shaft between the pump and driver must be used.

2. NET POSITIVE SUCTION HEAD (NPSH)

NPSH can be defined as the head (energy) that causes liquid to flow through the suction pipe and enter the eye of the impeller.

NPSH is expressed in two values: (1) NPSH required ($NPSH_R$) and (2) NPSH available ($NPSH_A$). It is essential that $NPSH_A$ be always greater than $NPSH_R$ to prevent cavitation, vibration, wear and unstable operation.

$NPSH_R$ is a function of the pump design and therefore varies with the model, size, capacity and speed of the pump. The value for your pump can be obtained from your pump performance curve or from the factory.

A. When the source of the liquid is above the pump:
   $NPSH_A$ = barometric pressure (feet) + static suction head (feet) – friction losses in suction piping (feet) – vapor pressure of liquid (feet)

B. When the source of the liquid is below the pump:
   $NPSH_A$ = barometric pressure (feet) - static suction lift (feet) – friction losses in suction piping (feet) – vapor pressure of liquid (feet)

3. MINIMUM SUBMERGENCE OF SUCTION PIPE AND PIT DESIGN

For installations where the pump draws fluid from a sump, the hydraulic characteristics of the pump, the suction inlet submergence and NPSH must be considered. Generally, it is required that an evenly distributed flow of non-aerated water be supplied to the suction bell. Improper pit design or insufficient suction pipe submergence can result in intake vortexing that reduces the pump's performance and can result in severe damage to the pump.

We recommend that you secure the advice of a qualified Consulting Engineer for the analysis of the suction pit. Significant engineering data on design is provided in the Hydraulic Institute Standards.

4. LOCATION AND HANDLING

The pump should be located as near the fluid as possible so a short direct suction pipe can be used to keep suction losses at a minimum. If possible, locate the pump so the fluid will flow to the suction opening by gravity. The discharge piping should be direct and with as few elbows and fittings as possible. The total net positive suction head available ($NPSH_A$), which includes suction lift and pipe friction losses, must be greater than the net positive suction head required ($NPSH_R$) by the pump.

The pump and driver should be located in an area that will permit periodic inspection and maintenance. Head-room and access should be provided and all units should be installed in a dry location with adequate drainage.

WARNING: DO NOT LIFT THE COMPLETE UNIT BY THE DRIVER OR PUMP SHAFTS OR EYE BOLTS.

To lift a horizontal mounted unit, a chain or suitable lifting device should be attached to each corner of the unit base. The driver by itself may be lifted using the proper eyebolts provided by the manufacturer, but these should not be used to lift the entire assembled unit.

5. FOUNDATION

The foundation should have a level surface and have sufficient mass to prevent vibration and form a permanent rigid support for the unit. The most satisfactory foundations are concrete with anchor bolts of adequate size embedded in the foundation in pipe sleeves with an inside diameter 2½ times larger than the bolt diameter. This will allow final accurate positioning of the unit.

6. LEVELING OF THE UNIT

Lower the unit onto the foundation, positioning it so the anchor bolts are aligned with the center of the mounting holes in the base. On all units, always disconnect the coupling halves and never reconnect them until all the alignment operations are complete.

The base should be supported on metal shims or metal wedges placed directly under the part of the base carrying the greatest weight, and spaced close enough to give uniform support and stability (see Figure 1).

Adjust the metal shims or wedges until the shafts of the pump and driver are level. Alignment adjustments can be accomplished by adjusting the supports under the base. When proper alignment is obtained, tighten the foundation bolts snugly, but not too firmly, and recheck the alignment before grouting.

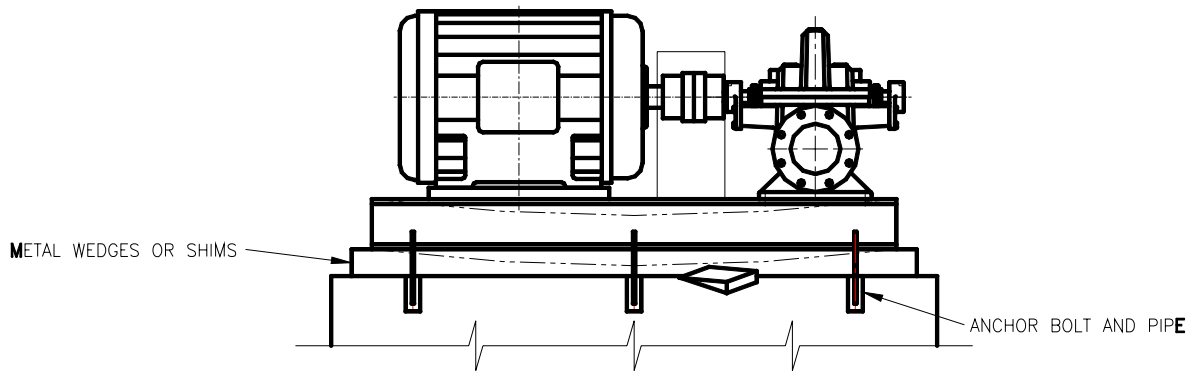

Figure 1
BASEPLATE INSTALLATION

7. GROUTING

When the alignment is correct, the unit should be grouted using high-grade non-shrinking grout. The entire base should be filled with grout. Be sure to fill all gaps and voids. Allow the grout to fully cure before firmly tightening the foundation bolts. Then recheck the alignment before connecting the piping.

8. PIPING

CAUTION: ALL PIPING CONNECTIONS MUST BE MADE WITH THE PIPING IN A FREE SUPPORTED STATE, AND WITHOUT THE NEED TO APPLY VERTICAL OR SIDE PRESSURE TO OBTAIN ALIGNMENT OF THE PIPING WITH THE PUMP FLANGE.

CAUTION: AFTER ALL THE PIPING IS CONNECTED, THE PUMP AND DRIVER ALIGNMENT MUST BE RECHECKED.

All piping should be independently supported near the pump so that pipe strain will not be transmitted to the pump casing. The suction and discharge piping should be one or two sizes larger than the pump flange sizes, especially where the piping is of considerable length. Any flexible joints installed in the piping must be equipped with tension rods to absorb piping axial thrust. Care must be exercised in arranging elbows so as not to generate vortexing in the pump inlet.

The suction pipe must be air tight and sloped upward to the pump flange to avoid air pockets that will impair satisfactory pump operation. The discharge pipe should be as direct as possible with a minimum of valves to reduce pipe friction losses.

A check valve and closing valve should be installed in the pump discharge line and a closing valve in the suction line. The check valve, between the pump and the closing valve, protects the pump from water hammer and prevents reverse rotation in the event of power failure. The closing valves are used in priming, starting and when the pump is shut down. The pump must never be throttled by the use of a valve in the suction line.

9. AUXILIARY PIPING CONNECTIONS AND GAUGES

In addition to the primary piping connections, your pump may require connections to the lantern ring (see the “Packing Box” section of this manual), stuffing box drain, discharge and suction flange gauges, casing relief valve drain or baseplate drain connections. All these lines and gauges should now be installed.

10. FINAL COUPLING ALIGNMENT

The alignment of the coupling must be carefully checked during installation and as the last step before starting the pump. If realignment is required, the piping should be disconnected first. After aligning, reconnect the piping in accordance with the previous instructions and again recheck the alignment.

A flexible coupling must not be used to compensate for misalignment resulting from poor installation or temperature changes.

Aurora Pumps are supplied with several different types of commercial couplings. Refer to the coupling manufacturer’s installation instructions for maximum allowable misalignment.

NOTE: FOR MAXIMUM LIFE, KEEP MISALIGNMENT VALUES AS NEAR TO ZERO AS POSSIBLE.

A. Check parallel misalignment by placing a straightedge across the two coupling flanges and measuring the maximum offset at various points around the periphery of the coupling. **DO NOT ROTATE THE COUPLING**. If the maximum offset exceeds manufacturer’s recommendations, realign the coupling.

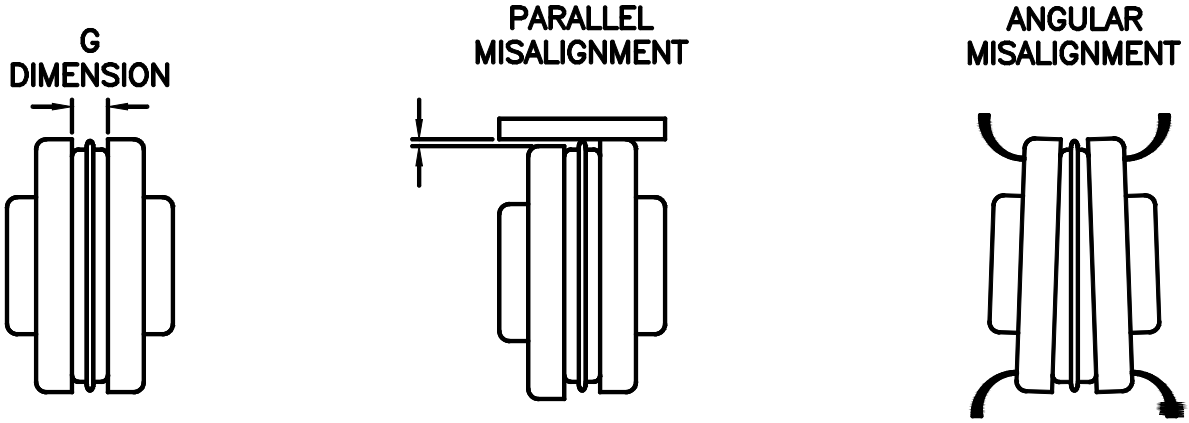

FIGURE 3
COUPLING ALIGNMENT

FINAL COUPLING ALIGNMENT (continued)

B. Check the angular alignment with a micrometer or caliper. Measure from the outside of one flange to the outside of the other at intervals around the periphery of the coupling. Determine the maximum and minimum dimensions. **DO NOT ROTATE THE COUPLING.** The difference between the maximum and minimum dimensions should not exceed manufacturer's recommendations. If a correction is required, you must always recheck the parallel alignment.

C. If the coupling employs a two-piece sleeve with a wire ring, force the ring into its groove in the center of the sleeve. It may be necessary to pry the ring into position with a blunt screwdriver.

WARNING: CHECK SAFETY CODES, AND ALWAYS INSTALL PROTECTIVE GUARD OR SHIELD AS REQUIRED BY VARIOUS FEDERAL, STATE AND LOCAL LAWS AND REGULATIONS CONCERNING OSHA.

WARNING: COUPLING SLEEVES MAY BE THROWN FROM THE ASSEMBLY WHEN SUBJECTED TO A SEVERE SHOCK LOAD.

11. FLEXIBLE SHAFTING ALIGNMENT

For installation and alignment of intermediate flexible shafting, refer to the manufacturer's instructions.

12. ROTATION

Before connecting the coupling halves, bump start the driver to verify rotation is in the proper direction. The correct pump rotation is indicated by a directional arrow on the pump casing.

Because variations exist in both the equipment used with these pumps and in the particular installation of the pump and driver, specific operating instructions are not within the scope of this manual. However, there are general rules and practices that apply to all pump installations and operation.

CAUTION: BEFORE STARTING OR OPERATING THE PUMP, READ THIS ENTIRE MANUAL, ESPECIALLY THE FOLLOWING INSTRUCTIONS:

A. BEFORE STARTING THE PUMP, INSTALL CLOSED GUARDS AROUND THE COUPLING.

B. BEFORE STARTING THE PUMP, ROTATE THE UNIT OR ASSEMBLY BY HAND TO ASSURE ALL MOVING PARTS ARE FREE.

C. OBSERVE ALL CAUTION AND DANGER TAGS ATTACHED TO THE EQUIPMENT.

D. NEVER RUN THE PUMP DRY AS THE CLOSE RUNNING FITS WITHIN THE PUMP ARE WATER LUBRICATED. RUNNING DRY MAY RESULT IN PUMP SEIZURE.

E. BEFORE STARTING THE PUMP, FILL THE CASING AND SUCTION LINE WITH LIQUID. THE PUMP MAY BE PRIMED USING AN EJECTOR OR VACUUM PUMP.

F. BEFORE STARTING A PACKED BOX PUMP, ADJUST THE PACKING GLAND SO THERE IS SUFFICIENT LEAKAGE TO LUBRICATE THE PACKING AND ASSURE A COOL PACKING BOX. (SEE MAINTENANCE INSTRUCTIONS).

***G.* IF EXCESSIVE VIBRATION OR NOISE OCCURS DURING OPERATION, SHUT THE PUMP DOWN AND CONSULT AN AURORA PUMP REPRESENTATIVE.**

1. OPERATING AT REDUCED CAPACITY

Although these pumps are applicable over a wide range of operating conditions, care should be exercised when doing so, especially when the actual conditions differ from the sold-for conditions. You should always contact your nearest Aurora Pump distributor before operating the pumps for any condition other than that for which it was sold.

2. PRIMING

Since the pump medium is used to lubricate various internal parts, running a centrifugal pump dry can result in extensive damage and possible seizing. It is therefore imperative that the pump be primed prior to initial start-up and that prime be maintained through subsequent start-stop cycles.

The priming method is different for positive and negative suction head systems, and the following procedures should be followed.

A. Positive Suction Head –

1. Open the vent on the highest point on the pump casing.
2. Open all suction valves.
3. Allow the pumped liquid to flow from the vent hole until all air bubbles are vented, then close the vent.
4. The pump is now primed.

B. Negative Suction Head –

1. Install an ejector or vacuum pump on the vent at the highest point on the pump casing.
2. Close the discharge valve.
3. Open the suction valve.
4. Start ejector or vacuum pump.
5. Allow the liquid to flow until a continuous flow is exhausted from the ejector, then close the valve to the vent.
6. The pump is now primed.

3. STARTING THE PUMP

A. After the pump is primed, and with the discharge valve closed and the suction valve open, start the driver according to the driver manufacturer's instructions.
B. Open the discharge valve slowly to prevent water hammer.
C. After the pump has been started, check bearing temperatures, packing box lubrication and operation and pump noise level for a period of several hours.

CAUTION: BEGIN THESE CHECKS IMMEDIATELY UPON STARTING THE PUMP AND MONITOR THEM CONTINUOUSLY FOR THE FIRST SEVERAL HOURS OF OPERATION.

4. BEARING OPERATING TEMPERATURE

These pumps are designed to operate over a wide ambient temperature range. The bearing temperature, when measured at the outside surface of the bearing housing, should not exceed 190°F. Temperatures in excess of 190°F may indicate lack of lubricant, bearing overload or insipient bearing failure. If the temperature exceeds this limit, the pump should be stopped and the cause investigated and corrected.

5. TROUBLESHOOTING OPERATING PROBLEMS

If you have followed the installation and start-up procedures outlined in this manual, your pump should provide reliable service and long life. However, if operating problems do occur, significant time and expense can be saved if you use the following checklist to eliminate the most common causes of those problems.

INSUFFICIENT DISCHARGE PRESSURE OR FLOW

1. Pump not primed.
2. Speed too slow; check driver.
3. Discharge head too high.
4. Suction lift too high.
5. Wrong direction of rotation
6. Air leaks into suction piping, packing box or gaskets.
7. Impeller passage partially plugged.
8. Impeller damaged.
9. Impeller running clearance too large.
10. Insufficient suction line submergence.
11. Air in liquid.
12. Impeller diameter too small.
13. Insufficient Net Positive Suction Head.

LOSS OF SUCTION DURING OPERATION

1. Suction line leaks.
2. Water seal line plugged.
3. Suction lift too high.
4. Air or gases in liquid.
5. Air leaks into suction piping, packing box or gaskets.
6. Wrong direction of rotation.
7. Insufficient suction line submergence.

EXCESSIVE POWER CONSUMPTION

1. Speed too high.
2. Head lower than rating, pumping too much liquid.
3. Specific gravity or viscosity of liquid too high.
4. Mechanical defects:
   - Shaft bent
   - Rotating element binds
5. Misalignment.
6. System head lower than design.
7. Incorrect impeller diameter.

VIBRATION OR NOISE

1. Misalignment between driver and pump.
2. Loose foundation bolts or defective grouting.
3. Mechanical defects:
   - Shaft bent
   - Rotating element binds
4. Head lower than rating; pumping too much liquid.
5. Pipe strain – improperly supported or aligned.
6. Pump running at shut-off condition.
7. Insufficient suction line submergence.
8. Air in liquid.

OVERHEATING

1. Bearings:
   - Excessive grease.
   - Shaft bent.
   - Rotating element binds.
   - Pipe strain.
   - Insufficient bearing lubrication.
   - Incorrect type grease
2. Packing box:
   - Packing gland too tight.
   - Water seal line plugged
   - Air not vented out of mechanical seal.
   - Flushing water not circulating for mechanical seal.

1. MAINTENANCE HISTORY

DATE	MAINTENANCE PERFORMED	PARTS USED	SYMBOL NUMBER(S)

2. INSPECTIONS AND PREVENTIVE MAINTENANCE REQUIREMENTS

To assure satisfactory operation of the pump, daily inspections and periodic maintenance are required. We suggest that an inspection and maintenance log be kept and that the inspector immediately report any problems. A guide for preventive maintenance for normal applications is given below. Unusual applications, with abnormal heat, moisture, dust, etc. may require more frequent inspections and service.

ITEM	ACTION REQUIRED	FREQUENCY (HOURS OF OPERATION)
Packing Box	Adjust gland, inspect packing for possible replacement	150 Hours
Pump Alignment	Check for change in alignment	ANNUALLY
Vibration	Check for change in vibration	ANNUALLY
Bearings: Grease lubricated	Lubricate	Every 2000 hours of operation, but at least once a year.

3. BEARING LUBRICATION

Grease Lubricated Bearings

Under normal operating conditions, the bearings must be lubricated after every 2000 hours of running time, but at least once a year regardless of total operating hours.

CAUTION: ANY APPLICATION WITH ABNORMAL HEAT, MOISTURE, DUST, ETC. MAY REQUIRE A CHANGE IN THIS SCHEDULE AND YOU SHOULD REFER TO A LUBRICATION ENGIEER OR THE FACTORY FOR SPECIFIC INSTRUCTIONS.

CAUTION: THE GREASES RECOMMENDED IN THIS MANUAL WILL PROVIDE SATISFACTORY LUBRICATION OVER A WIDE TEMPERATURE RANGE. THERE IS, HOWEVER, A PRACTICAL LIMIT, AND OPERATION OF THE PUMP SHOULD BE DISCONTINUED AND THE FACTORY CONSULTED IF THE TEMPERATURE, WHEN MEASURED ON THE OUTSIDE OF THE BEARING HOUSING, EXCEEDS 190°F.

RECOMMENDED GREASE: Chevron SRI grease N.L.G.I. No. 2 multi-purpose with a mineral oil viscosity of 517 SUS at 100°F or equivalent.

Proceed as follows for bearing lubrication:

WARNING: KEEP HANDS, FINGERS, CLOTHING AND ANY TOOLS AWAY FROM THE COUPLING. FAILURE TO DO SO COULD RESULT IN SERIOUS PERSONAL INJURY.

1. Stop the pump and remove the pipe plug at the bottom of the bearing housing.
2. Connect a grease gun to the lubrication fitting.
3. Inject grease until it relieves at the bearing housing cover and drain hole.
4. Remove the grease gun.
5. Start the pump. NOTE: Immediately after lubrication, bearing temperatures may rise above the normal level. Continue running the unit until bearing temperatures stabilize at the normal level.
6. Stop the unit, wipe off the relieved grease and replace the drain plug.
7. Start the unit and resume normal operation.

4. PACKING BOX

CAUTION: DO NOT TIGHTEN THE GLAND TO STOP ALL LEAKAGE. LEAKAGE IS NECESSARY TO ENSURE THE COOLING, FLUSHING AND LUBRICATION OF THE PACKING AND TO PREVENT SHAFT SLEEVE DAMAGE.

The packing boxes on Aurora Pumps are packed at the factory. All packing is subject to wear and should be given regular inspections and, if necessary, periodic adjustments. Generally, packed box pumps require inspection of the packing and adjustments to the glands after each 150 hours of operation.

Adjustment is made by lightly tightening the gland nuts, then loosening them so that they can be adjusted with finger pressure to allow a small flow of liquid to lubricate the packing. If the flow of liquid has increased and cannot be reduced by a slight tightening of the gland, replace the packing and/or shaft sleeve.

The packing boxes may be fitted with lantern rings. When a lantern ring is furnished, the sealing chamber should be connected to a source of clear fresh water.

5. PACKING REPLACEMENT

Use a good grade of soft, square long fiber packing, thoroughly graphited. The replacement procedure should be as follows:

A. Stop the pump.
B. Unbolt and remove the glands away from the packing.
C. Use a packing hook to remove the worn rings of packing and lantern rings. Note the location of the lantern rings relative to the amount of packing on each side of the lantern rings. (See sectional drawings on pages 21 & 22.)
D. Clean the packing boxes and shaft sleeves.
E. Inspect the shaft sleeves for wear or rough finish and replace if necessary.
F. Install new packing and lantern rings.

CAUTION: STAGGER THE PACKING END JOINTS 180 AND FIRMLY SEAT THE PACKING. THE FOLLOWING TABLE GIVES THE PERTINENT PACKING BOX, LANTERN RING AND PACKING DIMENSIONS (see page 12).

G. Reinstall the glands and tighten the gland nuts.
H. Loosen the gland nuts so they can be adjusted with finger pressure to obtain correct leakage for lubrication after start-up.

5. PACKING REPLACEMENT (continued)

	PUMP MODEL (PUMP SIZE)	
	5-495-15	6-495-17
PACKING BOX		
Sleeve O.D.	2-1/2	3-1/2
Packing Box I.D.	3-1/2	4-1/2
Packing Box Depth	4	5-1/4
PACKING SIZE	1/2	1/2
Qty. of Rings per Box (Without Lantern Ring)	8	9
Lantern Ring Width	1	7/8
PACKING ARRANGEMENT WITH LANTERN RING (Packing Rings-Lantern Ring-Packing Rings)*	3-L-3	4-L-4

* See Sectional Drawings on pages 21 & 22.

6. PUMP DISASSEMBLY

CAUTION: READ THIS ENTIRE DISASSEMBLY PROCEDURE AND REFER TO THE SECTIONAL DRAWINGS IN THIS MANUAL BEFORE PROCEEDING.

Major maintenance, beyond lubrication and adjustment or replacement of packing, will require disassembly of the pump. Following are step-by-step instructions.

A. Lock out the power to the driver and close the suction and discharge valves. Drain the pump, disconnect and remove the coupling or flexible shafting. Disconnect and remove all auxiliary piping to the upper casing (3) and bearing housings (6) (packing box flush line, etc.).

CAUTION: USE OF A CRANE OR HOIST OF ADEQUATE CAPACITY IS RECOMMENDED. THE LIFTING HOOK SHOULD BE NO LESS THAN 3-4 FEET ABOVE THE EYE OF THE EYEBOLTS TO AVOID BENDING OF THE BOLTS. THE USE OF THE SHORT EYEBOLTS IS NOT RECOMMENDED SINCE THE UPPER CASING HALF WILL TEND TO TIP WHILE BEING LIFTED, RESULTING IN POSSIBLE DAMAGE OR PERSONAL INJURY.

B. Remove the capscrews securing the upper casing half (3) to the lower half (2). Remove the gland nuts and slide the glands (19) off the gland studs. Install jack screws in the tapped holes in the upper casing half and use them to separate the flanges. Carefully lift the upper casing half using long shank eyebolts in the tapped holes in the upper casing half.

C. Remove the capscrews and pins that secure the bearing cartridges (A158 & B158) to the lower casing (2). The pins may be removed using the threaded holes in the pins.

WARNING: BE CAREFUL WHEN POSITIONING THE ROPES TO AVOID THE ROTOR SLIPPING AND CAUSING POSSIBLE SERIOUS PERSONAL INJURY.

D. Lift the rotor assembly from the casing using a double rope sling.

6. PUMP DISASSEMBLY (continued)

E. Remove the capscrews that secure the bearing cartridge covers (159) to the bearing cartridges and remove the cartridges from the rotating assembly.

WARNING: TO PREVENT POSSIBLE SERIOUS PERSONAL INJURY, EXTREME CARE SHOULD BE EXERCISED TO SELECT THE PROPER PULLER, AND APPROVED SAFETY GLASSES SHOULD BE WORN.

CAUTION: BECAUSE OF POSSIBLE DAMAGE OR CONTAMINATION DURING REMOVAL, BEARINGS SHOULD NOT BE REUSED AND NEW BEARINGS SHOULD ALWAYS BE INSTALLED.

F. Remove the bearing locknut (161) and bearing lock washer (162) from the outboard bearing end of the rotating assembly, and use a wheel/bearing puller to remove the outboard / thrust (168) and inboard / radial (163) bearings. Apply pressure on the inner race of the bearings.

G. Remove bearing cartridge covers (159), water slingers (126), casing wearing rings (16), lantern rings (10), stuffing box bushings (95), and packing (212).

H. Remove the shaft sleeves (14). Depending on the pump service, shaft sleeves are supplied in two different configurations. The removal procedure for each configuration differs:

WARNING: TO PREVENT POSSIBLE SERIOUS PERSONAL INJURY, HEAT RESISTANT GLOVES MUST BE WORN WHEN HANDLING HEATED PARTS.

Sleeves Affixed With Loctite: Remove the shaft sleeve nuts (213) (if they are provided), heat the sleeves to approximately 450°F to break the bond, then tap them with a brass or copper mallet.

CAUTION: BECAUSE OF POSSIBLE DAMAGE DURING DISASSEMBLY, O-RINGS SHOULD NOT BE REUSED AND NEW O-RINGS SHOULD ALWAYS BE INSTALLED.

Sleeves Keyed To Shaft: Remove the shaft sleeve nuts (213), shaft sleeves (14) and the shaft sleeve O-rings (20).

I. Press off the first stage impeller (A1) off the shaft (4). Remove the casing diaphragm bushing (48) and the casing diaphragm (39). Press the second stage impeller (B1) off the shaft (4) and remove the impeller key (102).

J. If your pump has impeller wear rings (17) and they require replacement, they will be secured by one of two methods, and you should proceed as follows:

WARNING: TO PREVENT POSSIBLE SERIOUS PERSONAL INJURY, HEAT RESISTANT GLOVES MUST BE WORN WHEN HANDLING HEATED PARTS.

Wearing Rings Secured With Loctite: Heat the sleeves to approximately 450°F to break the bond, and then tap them with a brass or copper mallet. If heating fails to affect removal, the rings may be ground off.

WARNING: TO PREVENT POSSIBLE SERIOUS PERSONAL INJURY, EXTREME CARE SHOULD BE EXERCISED TO SELECT THE PROPER GRINDING EQUIPMENT, AND APPROVED SAFETY GLASSES SHOULD BE WORN WHEN GRINDING.

Wearing Rings Secured With Setscrews: Remove the setscrews and chisel cut or grind the rings in two at the setscrew location.

K. The pump disassembly is now complete. All parts should be thoroughly cleaned and inspected for wear or damage, and replaced if required.

7. PUMP ASSEMBLY

CAUTION: READ THIS ENTIRE PROCEDURE BEFORE CONTINUING.

Following are step-by-step instructions for assembly of the pump and are essentially the reverse order of the instructions for disassembly.

A. Thoroughly clean all parts to remove oil, grease and foreign material. Inspect for wear or damage and replace if required. Remove all parts to a clean and dust-free location for assembly. Gaskets, grease seals and bearings should not be reused and should always be replaced with new parts.

B. If the impeller wear rings (17) require replacement, they are a light press fit and will be secured by one of the following methods. You should proceed as follows:

Rings Secured With Loctite: Apply a light film of Loctite No. 290 to the impeller part of the impeller/wear ring fit and install the rings.

CAUTION: BE CAREFUL NOT TO DRILL THROUGH THE IMPELLER AND BE SURE TO PRESS THE WEAR RING COMPLETELY IN PLACE. THEY SHOULD BE FIRMLY BUTTED AGAINST THE CORRESPONDING IMPELLER SHOULDER.

Rings Secured With Set Screws: Press the rings in place and drill and tap them using the same size and number of setscrews as originally provided. The new holes should be 15° to 20° from the old holes. Install and tighten the set screws.

C. Install the impeller key (102) in the shaft (4) and press the first stage impeller (A1) over the key, assuring the impeller is in proper rotation.

D. Install the casing diaphragm bushing (48). Place the casing diaphragm (39) over the impeller hub so the full diameter lip is next to the second stage impeller (B1).

CAUTION: IF THE SHAFT SLEEVES ON YOUR PUMP ARE SECURED WITH LOCTITE ONLY, REFER TO THE SHAFT SLEEVE INSTALLATION INSTRUCTIONS BEFORE INSTALLING THE IMPELLER.

E. Press the second stage impeller (B1) onto the shaft (4) and over the key (102) until it is firmly against the hub of the first stage impeller (A1). To obtain linear positioning of the impellers, leave an equal amount of overhand for each impeller fit.

CAUTION: THE LINEAR POSITION OF THE IMPELLER MUST BE OBTAINED AND THE SHAFT SLEEVES MUST BE PROPERLY LOCATED. IF PROVIDED, THE SHAFT SLEEVE NUTS MUST BE TIGHTENED WITHIN 10 MINUTES AFTER THE LOCTITE IS APPLIED. TO ACCOMPLISH LINEAR POSITIONING OF THE IMPELLERS, LEAVE AN EQUAL AMOUNT OF SHAFT OR SHAFT THREADS EXPOSED ON EACH END OF THE SHAFT AFTER ASSEMBLY IS COMPLETED. ALLOW 4 HOURS FOR THE LOCTITE TO CURE BEFORE COMPLETING THE PUMP ASSEMBLY.

CAUTION: THIS PUMP MAY BE SUPPLIED IN SEVERAL DIFFERENT CONFIGURATIONS. EACH USES DIFFERENT BEARING COVERS AND HOUSINGS WITH DIFFERENT DRAWING REFERENCE NUMBERS. DESPITE THE FOLLOWING INSTRUCTIONS, ALWAYS REFER TO THE SECTIONAL DRAWINGS CONTAINED IN THIS MANUAL BEFORE PROCEEDING, TO INSURE THAT YOU HAVE INSTALLED ALL REQUIRED LIP SEALS, O-RINGS, ETC.

F. Install the shaft sleeves (14), shaft sleeve nuts (213) and O-rings (20), if your pump uses them, on the shaft. The shaft sleeves will be secured by one of three methods and you should proceed as follows:

Sleeves Secured With Loctite And Sleeve Nuts: Apply two beads of Loctite No. 601 around the shaft on the shaft/shaft sleeve fit, one approximately 2 inches from the impeller hub and the second at the threaded end. Slide the shaft sleeves part way onto the shaft and rotate them at least one full revolution to evenly spread the Loctite, then slide the sleeves over the shaft until they butt firmly against the impeller hub. Install and tighten the shaft sleeve nuts (213) and the setscrews.

7. PUMP ASSEMBLY (continued)

Sleeves Secured With Loctite Only: Clean the shaft, the bore of the sleeves and the bore of the impellers with Loctite “Safety Solvent #75559.

Install the impeller key in the shaft and coat the impeller area on the shaft with Loctite 601. Press each impeller onto the shaft as previously mentioned.

Coat the shaft on the shaft/sleeve fit and the bore of the sleeves with Loctite 601. Slide the sleeves part way onto the shaft and rotate them at least one full revolution to evenly spread the Loctite, then slide the sleeves over the shaft until they butt firmly against the impeller hub. Check the sleeve location again and let the Loctite cure for 8 hours before completing the pump assembly.

Sleeves Installed With O-rings: Slide the shaft sleeves over the shaft until they engage the key and butt firmly against the impeller hub. Install the O-rings in the outboard shaft sleeve nut end of the sleeve and tighten the shaft sleeve nuts and setscrews.

G. Install the water slingers (126) on each end of the shaft.
H. Install the outboard and inboard bearing covers (159) on the shaft.

WARNING: TO PREVENT POSSIBLE SERIOUS PERSONAL INJURY AND DAMAGE TO THE BEARINGS, PRESSURE SHOULD BE APPLIED TO THE INNER BEARING RACE ONLY.

I. Install the outboard / thrust (168) and inboard / radial bearings (163).

Note: The pump is designed to have a .000 to .001 interference fit between the bearings and the shaft.

J. Install the bearing lock washer (162) and bearing locknut (161) on the outboard end of the shaft. Pack both bearings approximately one-half full of lithium base NGLI2 all-purpose bearing grease.
K. Install bearing cartridges (A158 and B158 if grease lubricated, or C158 and D158 if oil lubricated) over the bearings and securely bolt the bearing covers to the bearing housings using the appropriate capscrews.
L. Position casing wear rings (16) on the impellers.

WARNING: BE CAREFUL WHEN POSITIONING THE ROPES TO AVOID THE ROTOR SLIPPING AND CAUSING POSSIBLE SERIOUS PERSONAL INJURY.

CAUTION: WHEN LOWERING THE ROTOR, BE CAREFUL TO PROPERLY POSITION THE WEARING RINGS. FAILURE TO DO SO COULD SERIOUSLY DAMAGE THE RINGS.

M. Using a double rope sling, carefully lower the rotor assembly into the lower casing (2).

7. PUMP ASSEMBLY (continued)

N. Attach the bearing cartridges to the lower casing using the appropriate dowel pins (158B).

CAUTION: BE SURE BEARING HOUSING/CASING MATING SURFACES ARE CLEAN AND FREE FROM BURRS, AS THIS WILL AFFECT THE ALIGNMENT OF THE ROTOR/CASING.

O. Inspect the upper casing (3) to assure that the water passages are clean and free from foreign material. Apply a light coat of grease to the upper and lower casing mating surfaces and install a new casing gasket (157) on the lower casing, making sure the holes are aligned. Position the pins in the casing wearing rings to align with the slots in the lower casing. Lower the upper casing into position. Install the casing alignment pins and securely bolt the upper and lower casing together using the capscrews.

P. Install the packing (212), lantern rings (10), split glands (19) and gland nuts.

The pump assembly is now complete except for packing adjustment, which should be accomplished after the pump is installed, primed and started up. Refer to the maintenance section of this manual for specific packing adjustment instructions.

ORDERING PARTS

There are a variety of options available for this pump. When ordering parts, give the pump serial number, size and figure number and a complete description and item number of each part. Refer to the drawings and parts list in the back of this manual. You should order parts from your local Aurora Pump distributor. Consult your local telephone yellow pages for the office nearest you.

RETURNING PARTS

Unnecessary delays and wasted effort will be avoided if you use the proper procedure to return parts or equipment. All materials or parts returned to the factory must have prior approval and a “Material Return Authorization (MRA) Tag.”

Contact your nearest Aurora Pump distributor, listing the material to be returned and the reason for the return. He will contact the factory to obtain the required approval and “MRA Goods Tag.” All materials to be returned should be carefully packaged to avoid damage in route from rough handling or exposure to weather. The “MRA Tag” will give shipping instructions. All material is to be returned freight prepaid.

Aurora Pump makes improvements on its products from time to time and reserves the right to furnish improved parts for repairs. A part that is received and is not identical in appearance, or has a different symbol from the original part, may still be interchangeable. Examine the part carefully before contacting your Aurora Pump distributor. The parts should never be returned to the factory without first obtaining proper authorization from your Aurora Pump distributor.

RECOMMENDED SPARE PARTS
For Normal Duty:

REF. NO.	DESCRIPTION
14	SLEEVE, SHAFT- RIGHT AND LEFT HAND
16	WEARING RING, CASING
17	WEARING RING, IMPELLER (IF ON ORIGINAL CONSTRUCTION)
163	BEARING, INBOARD / RADIAL
168	BEARING, OUTBOARD / THRUST
212	PACKING
	GASKETS, COMPLETE SET

For Severe Duty, Add The Following:

REF. NO.	DESCRIPTION
	COMPLETE ROTATING ASSEMBLY

NOTES

NOTES

NOTES

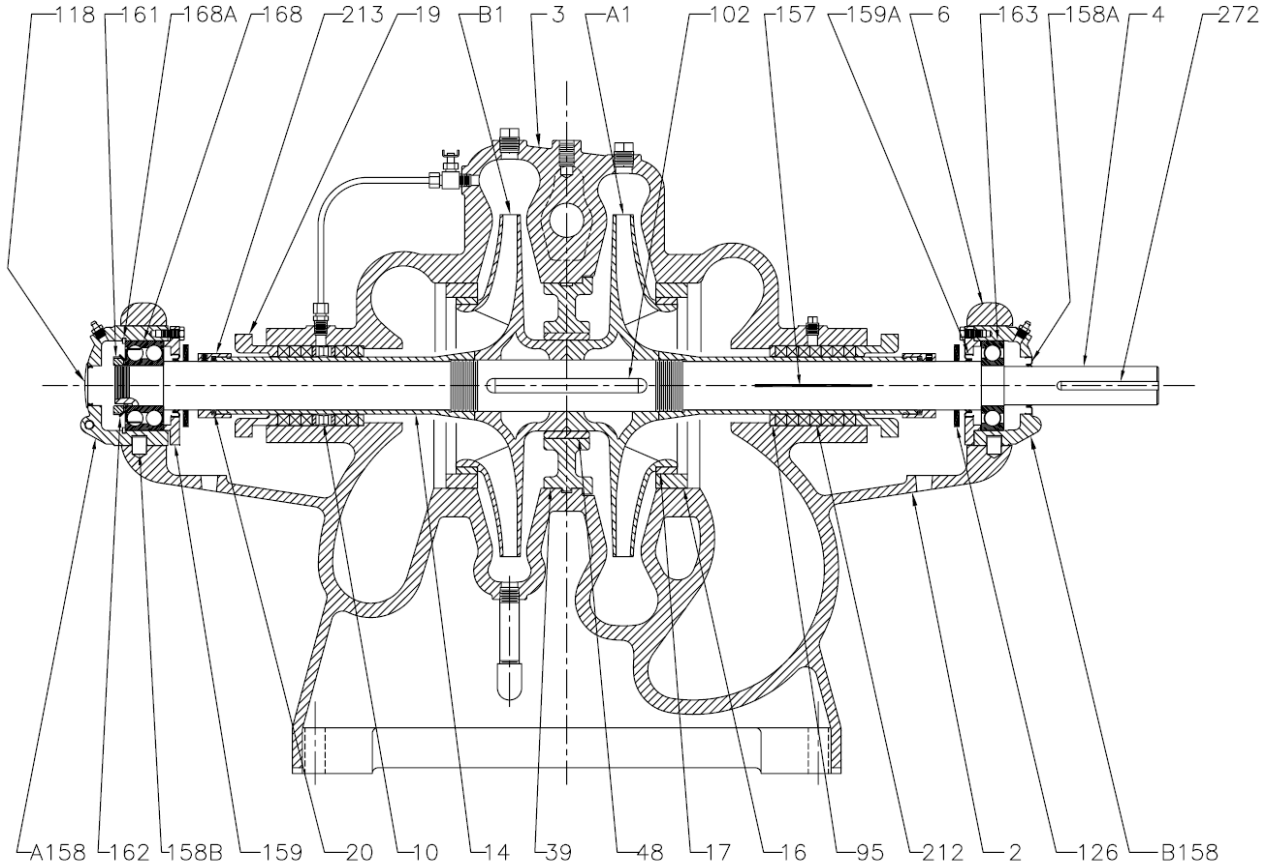

Figure 6
STANDARD CONSTRUCTION

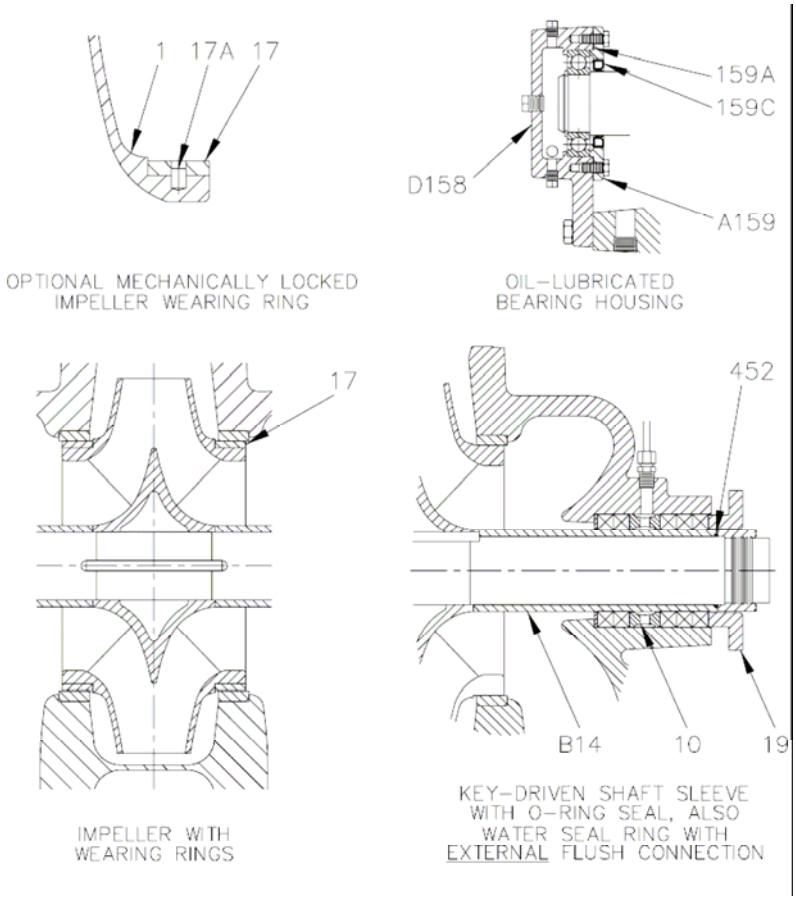

Figure 7

REF. NO.	DESCRIPTION	REF. NO.	DESCRIPTION
A1	FIRST STAGE IMPELLER	157	GASKET, CASING
B1	SECOND STAGE IMPELLER	158A	GREASE SEAL
2	CASING, LOWER HALF	158B	DOWEL PIN
3	CASING, UPPER HALF	A158	BEARING CART., INBOARD, GREASE LUBE
4	SHAFT	B158	BEARING CART., OUTBOARD, GREASE LUBE
6	BEARING HOUSING	C158 *	BEARING CART., INBOARD, OIL LUBE
10	LANTERN RING	D158	BEARING CART., OUTBOARD, OIL LUBE
14	SHAFT SLEEVE- RIGHT & LEFT HAND	159	BEARING HOUSING COVER, GREASE LUBE
B14	SHAFT SLEEVE- KEY DRIVEN	159A	SEAL
16	WEARING RING, CASING	159C	LIPSEAL
17	WEARING RING, IMPELLER	A159	BEARING HOUSING COVER, OIL LUBE
17A	SETSCREW	161	BEARING LOCKNUT
19	PACKING GLAND, SPLIT	162	BEARING LOCK WASHER
20	O-RING, SHAFT SLEEVE	163	BEARING, INBOARD / RADIAL
39	CASING DIAPHRAGM	168	BEARING, OUTBOARD / THRUST
48	CASING DIAPHRAGM BUSHING	168A	RETAINING RING
95	STUFFING BOX BUSHING	212	PACKING
102	KEY, IMPELLER	213	NUT, SHAFT SLEEVE
118	CLOSURE- THRUST BEARING CARTRIDGE	272	KEY, COUPLING
126	WATER SLINGER		

*- NOT SHOWN